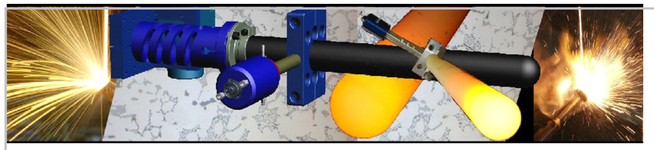

Ultrasonic vibrations in metallurgy
(Universal Proposal)

MP Interconsulting
Marais 36,
2400 Le Locle, Switzerland
www.UltrasonicsWorldGroup.com

Phone: +41-32-9314045
Fax: +41-32-9314079
www.mpi-ultrasonics.com
mpi@mpi-ultrasonics.com

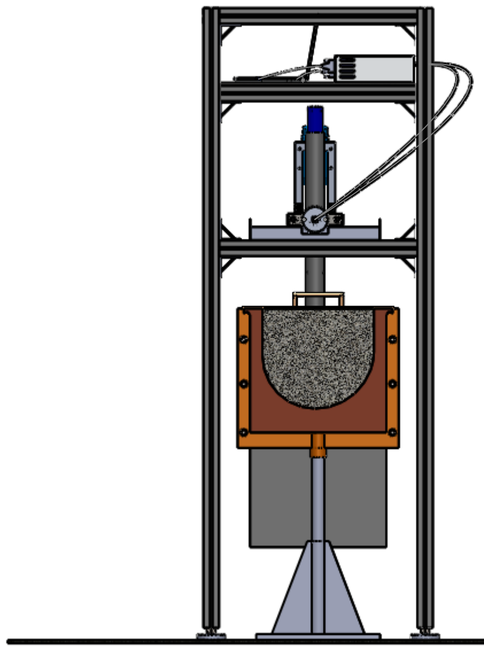

We can now separate the ultrasonic transducers from the liquid metal using long metal waveguide rods, yet still introduce high ultrasonic power into liquid metals.

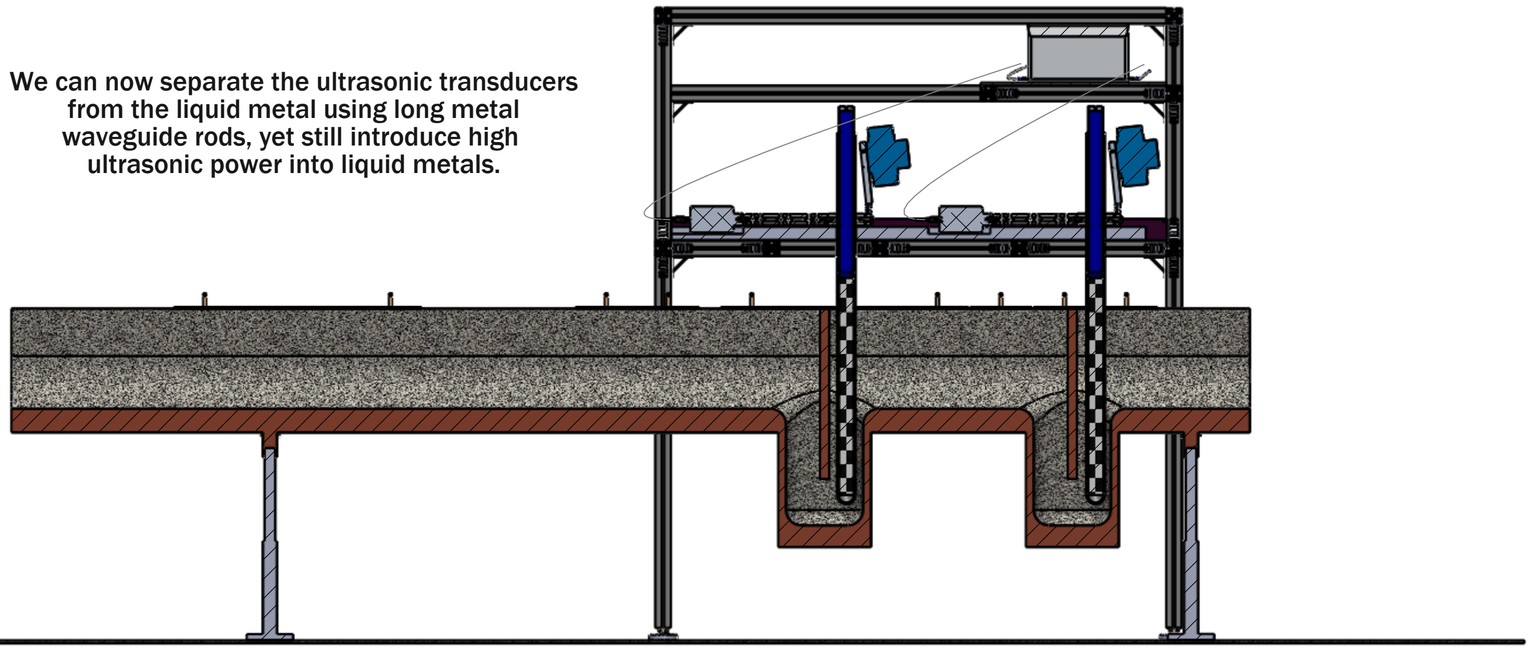

Thanks to MMM technology

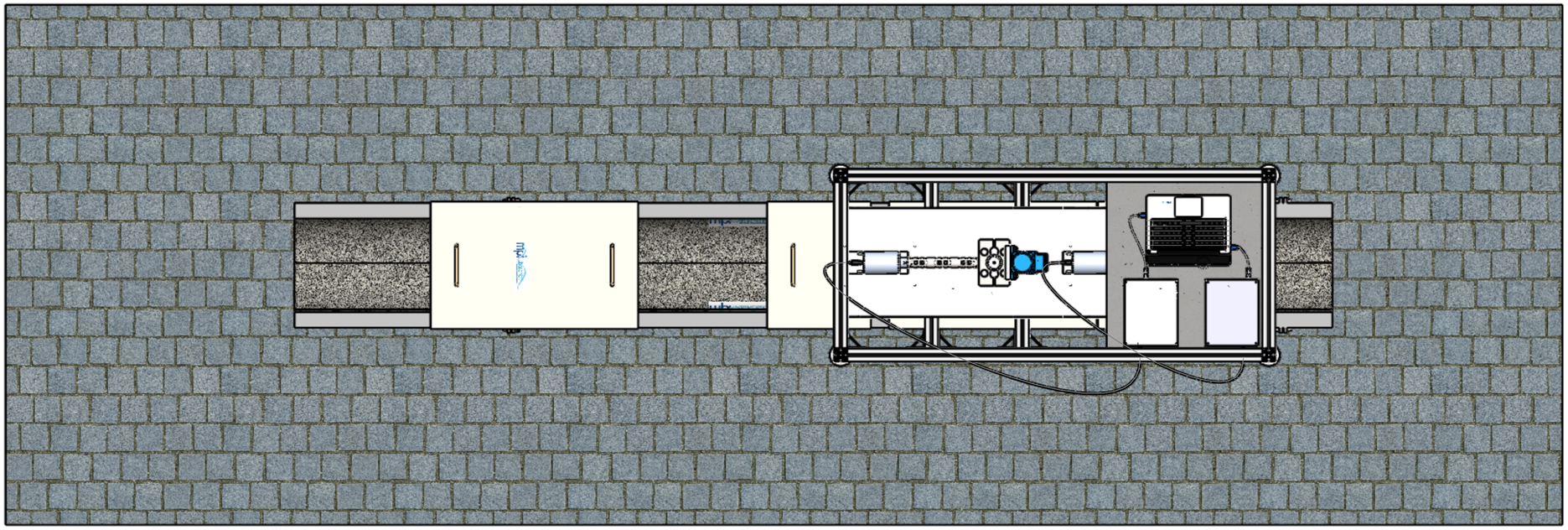

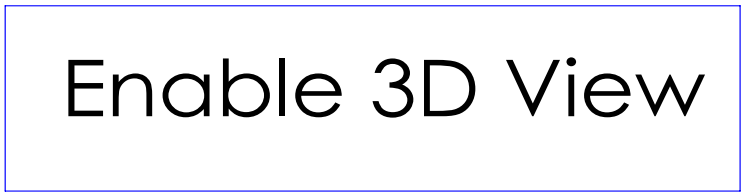
Enable 3D View

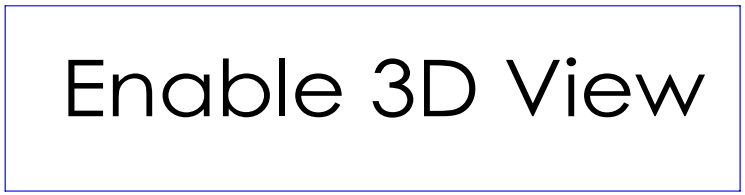
Enable 3D View

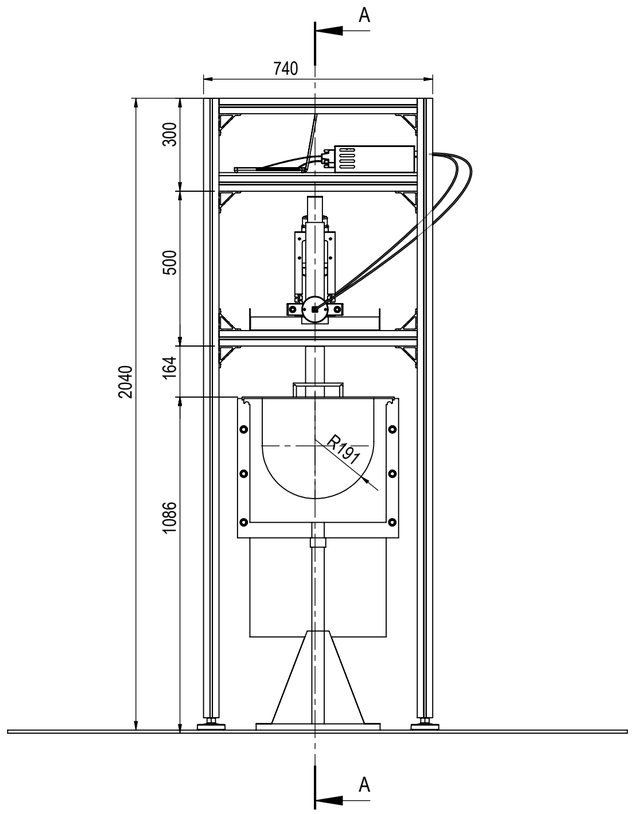

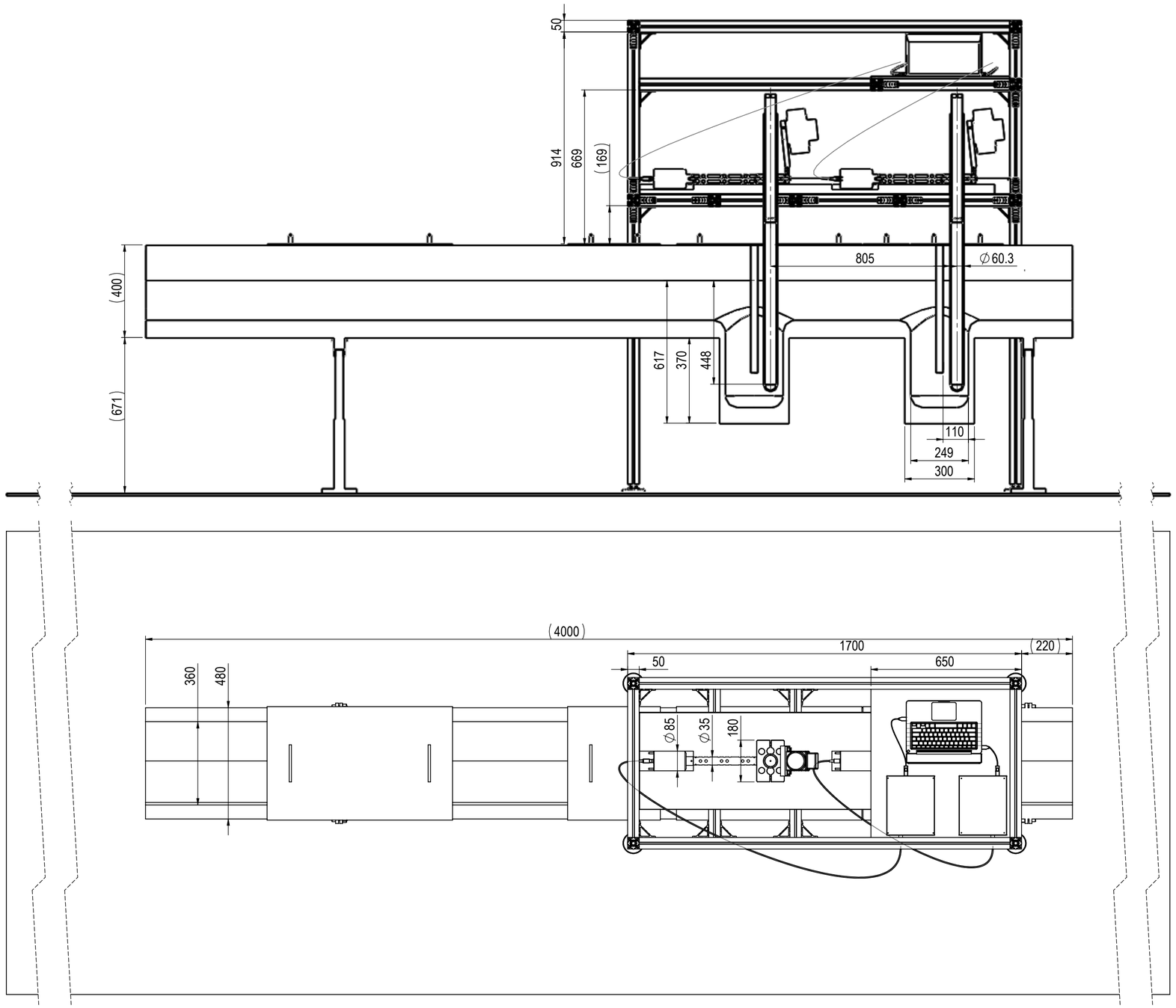

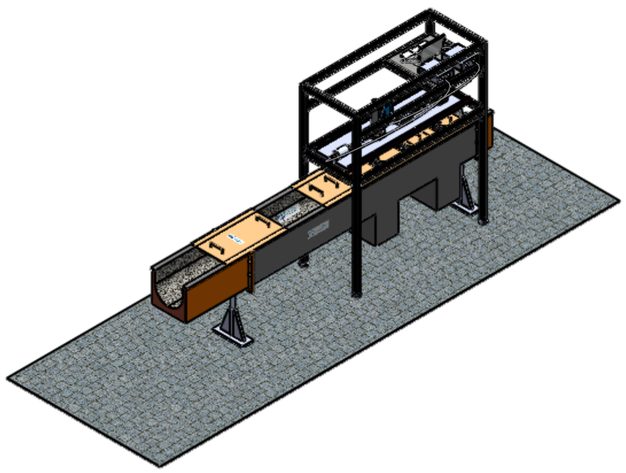

PROJECT DIRECTOR M.Prokic	DATE 07.12.2013					DEBUR AND BREAK SHARP EDGES	DO NOT SCALE DRAWING	REVISION
drew H. Puga	DATE MODIFY						MPI-ULTRASONICS MARAIS 36 2400 Le Locle Switzerland e-mail : mpi@mpi-ultrasonics.com phone +41 (0) 32 9314045	
MATERIAL:								
General tolerance SN 258440							US-Treatment_Universal Proposal	
dimension nominale (mm)	>3 ...6	>6 ...30	>30 ...120	>120 ...400	>400 ...1000	>1000 ...2000	SCALE: 1:5	SHEET 1 OF 1 A2
Ecarts (mm)	± 0.05	± 0.1	± 0.15	± 0.2	± 0.3	± 0.5		

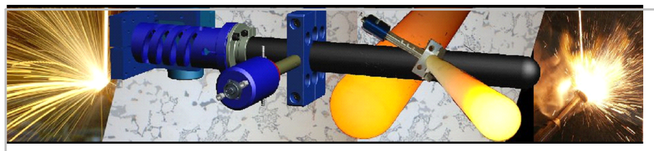

Ultrasonic vibrations in metallurgy
(Universal Proposal)

MP Interconsulting
Marais 36,
2400 Le Locle, Switzerland
www.UltrasonicsWorldGroup.com

Phone: +41-32-9314045
Fax: +41-32-9314079
www.mpi-ultrasonics.com
mpi@mpi-ultrasonics.com

MMM Technology

We can now separate the ultrasonic transducers from the liquid metal using long metal waveguide rods, yet still introduce high ultrasonic power into liquid metals.

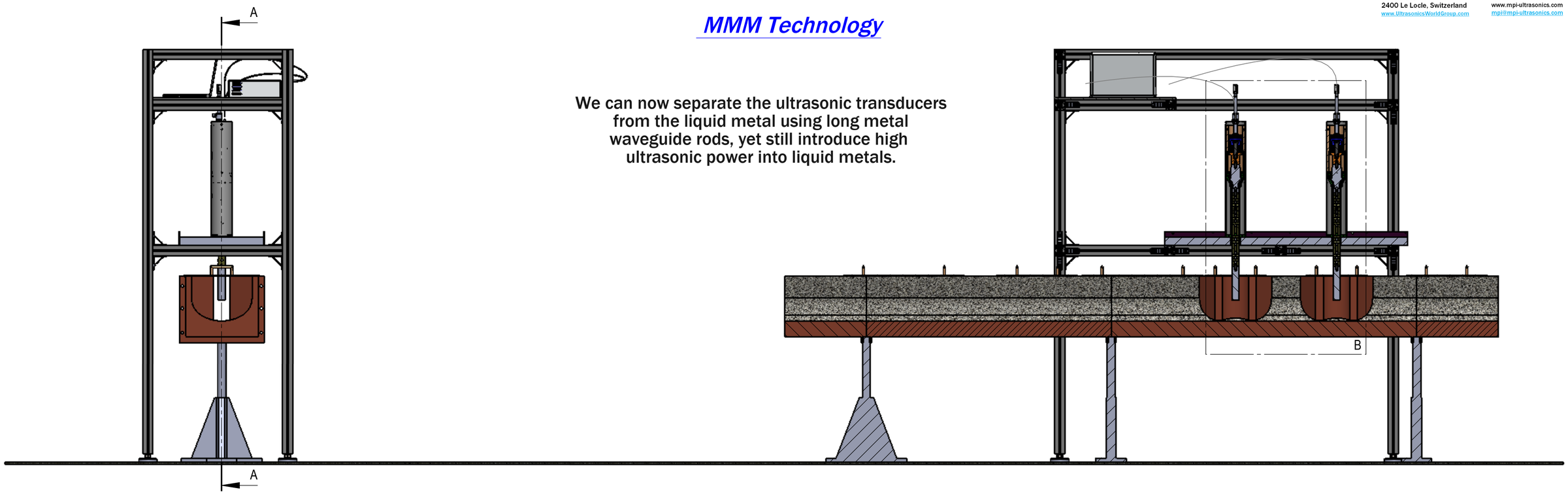

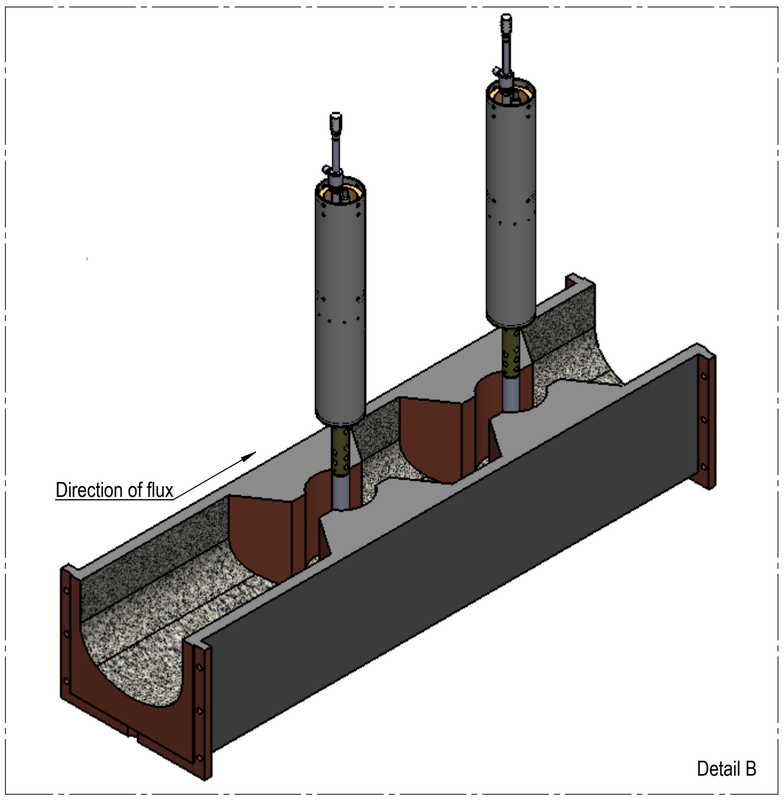

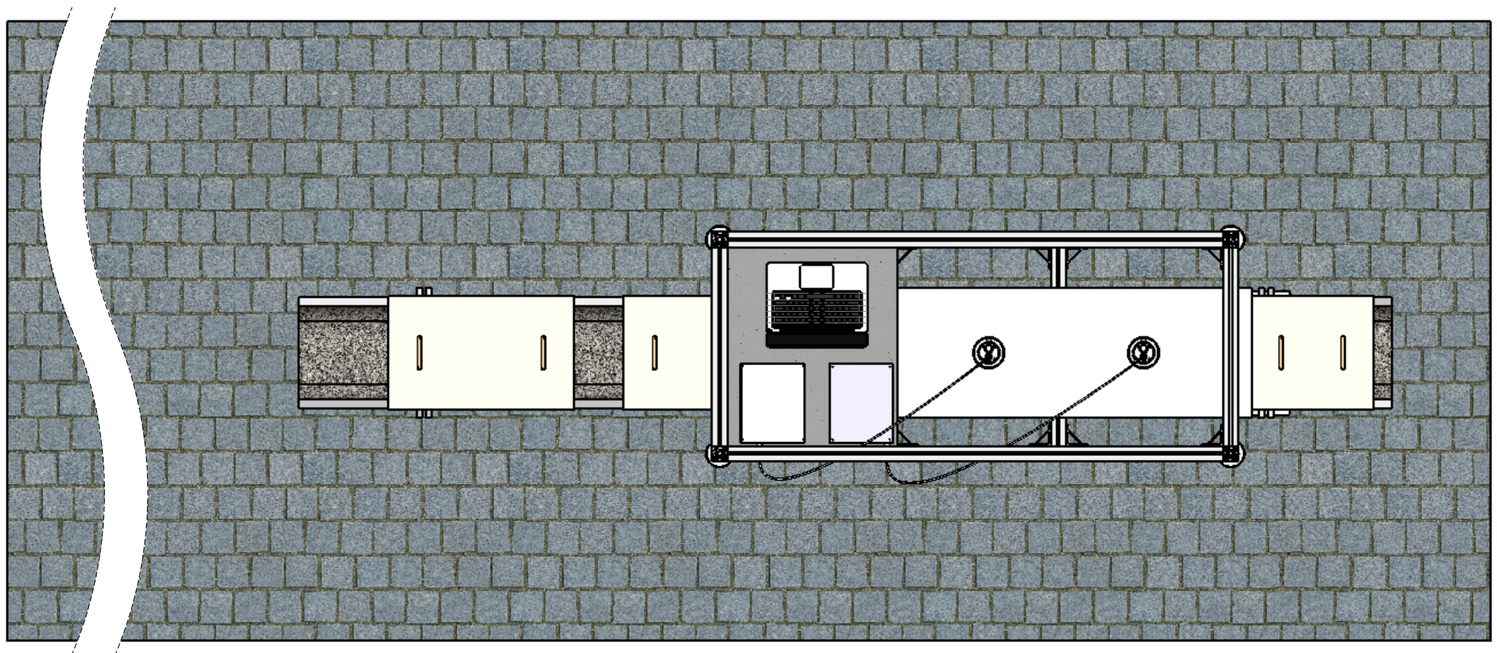

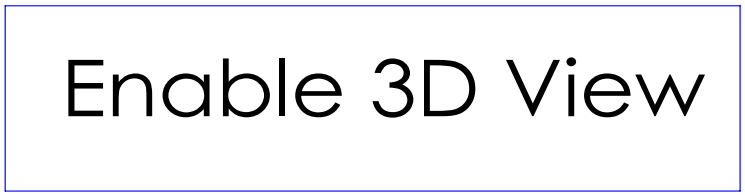
Enable 3D View

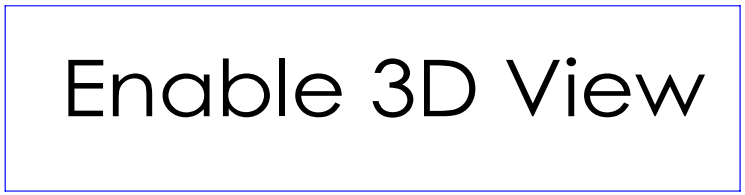
Enable 3D View

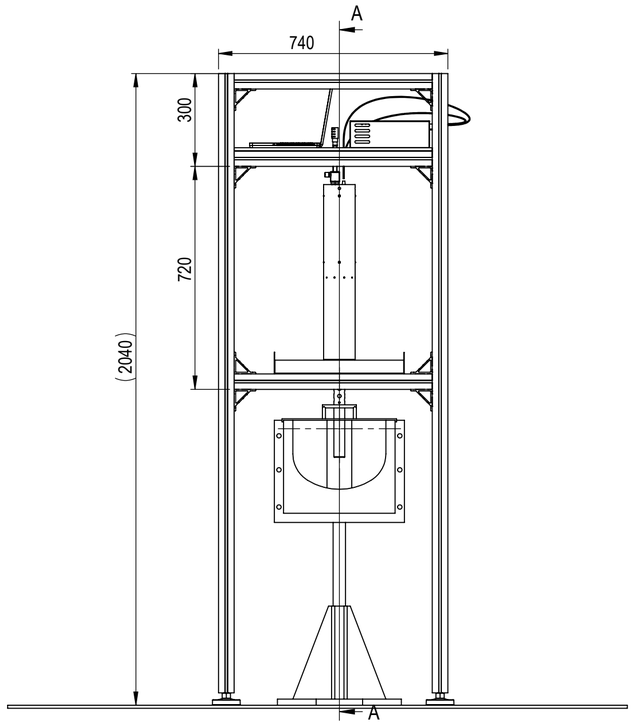

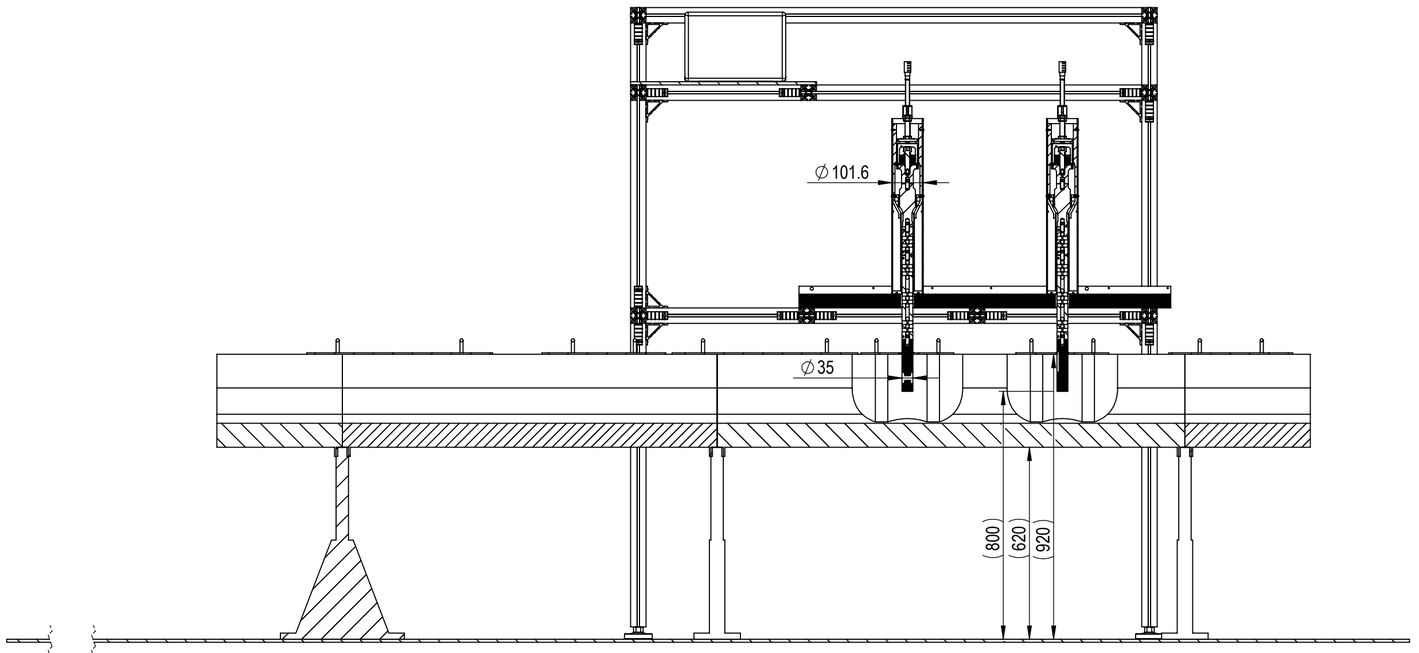

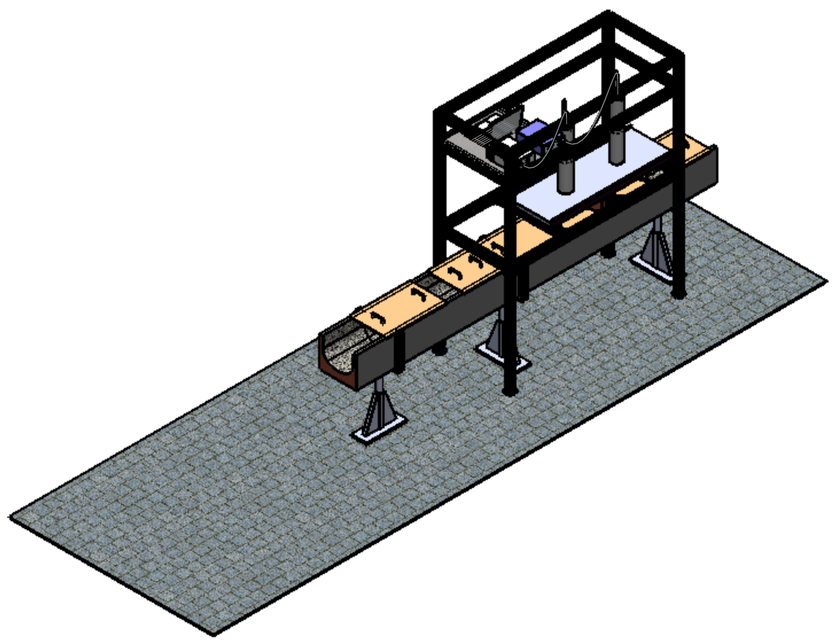

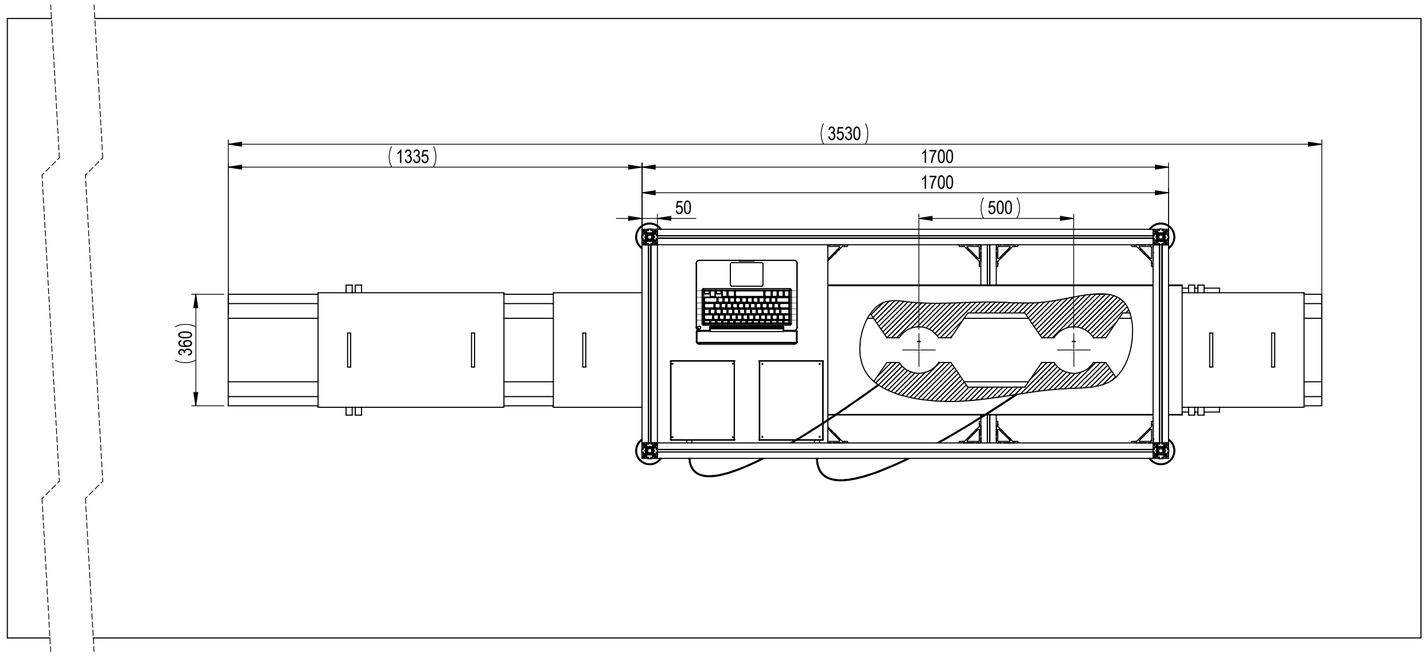

PROJECT DIRECTOR M.Prokic	DATE 11.12.2013					DEBUR AND BREAK SHARP EDGES	DO NOT SCALE DRAWING	REVISION	
drew H. Puga	DATE MODIFY						MPI-ULTRASONICS MARAIS 36 2400 Le Locle Switzerland e-mail : mpi@mpi-ultrasonics.com phone +41 (0) 32 9314045		
MATERIAL:									
General tolerance SN 258440									
dimension nominale (mm)	>3 ...6	>6 ...30	>30 ...120	>120 ...400	>400 ...1000	>1000 ..2000	US-Treatment_Universal Proposal_Version_Niobiun		
Ecarts (mm)	± 0.05	± 0.1	± 0.15	± 0.2	± 0.3	± 0.5	SCALE: 1:5	SHEET 1 OF 1	A2